code: 231 670 XXX

Techno M3

Deck valve Kit Trim TechnoM3

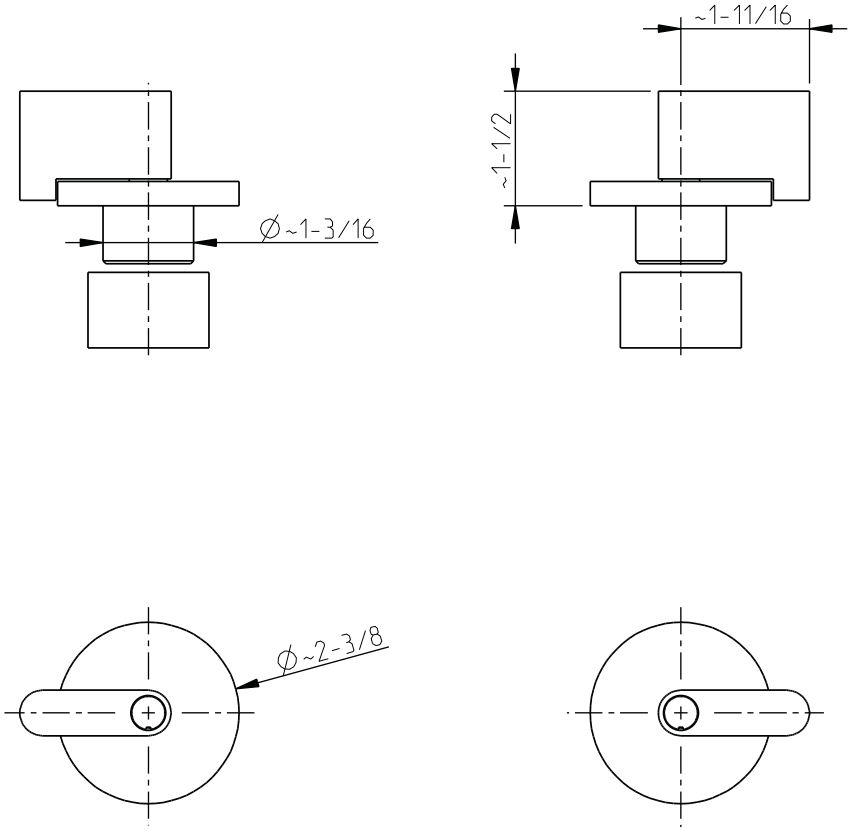

CIFIAL

www.cifial.eu

dimensions inches

5665426
983M301 6W01

code: 231 670 XXX

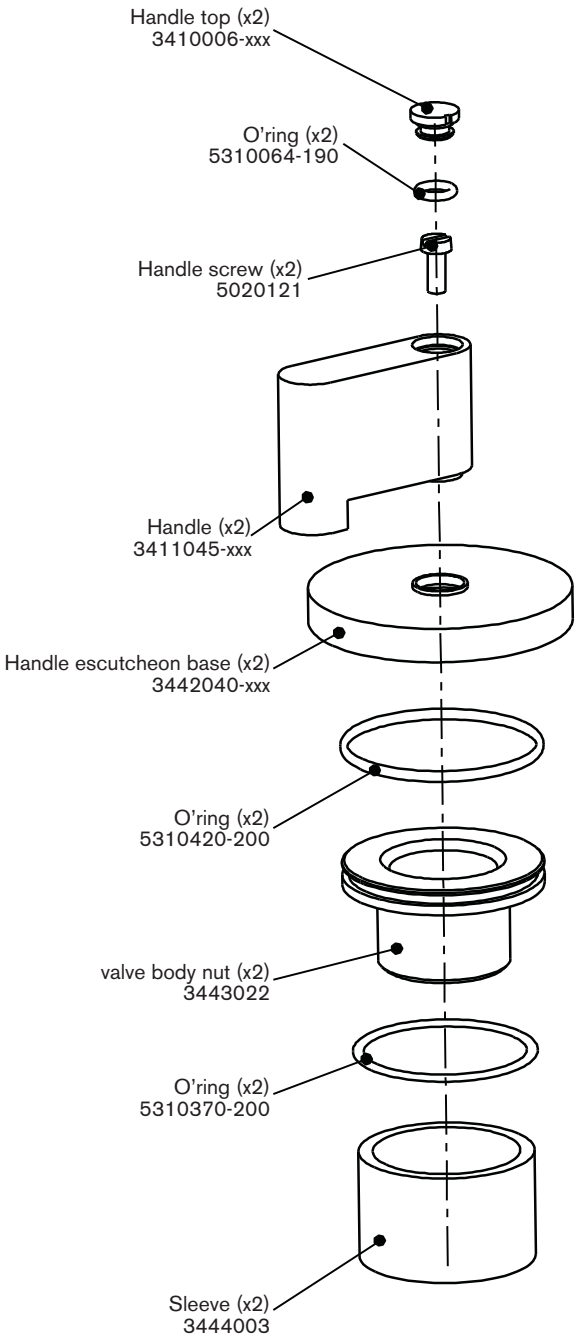

Notes:
xxx represent different finishes

Installer: Please leave all leaflets with the building owner to file for future reference

5665426
983M3016W01